© – TE Connectivity. All Rights Reserved.

REVISIONS					
P	LTR	DESCRIPTION	DATE	DWN	APVD
	A	ECN–25–315538,GTP	09APR2025	TP	WK

NOTES:

PACK ACCORDANCE WITH TE SPEC 107–3275;

ALL DIMENSIONS ARE NOMINAL FOR REFERENCE ONLY UNLESS OTHERWISE STATED;

RoHS: COMPLIANT.

MECHANICAL CHARACTERISTICS

ENGAGEMENT AND DISENGAGEMENT FORCE
ENGAGEMENT: 0.23 N.m max.
DISENGAGEMENT: 0.23 N.m max.

DURABILITY: 500 cycles min.

PRODUCT WEIGHT: 6.9 G

ENVIRONMENTAL PARAMETER

TEMPERATURE RANGE: –65°C TO +165°C

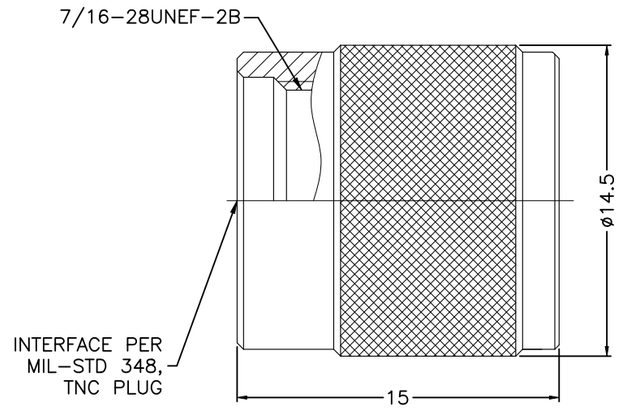

NOTES:
FINISH (PLATING THICKNESS IN MICRO–INCHES)

1 100 MICROINCHES MIN NICKEL PLATED,
50 MICROINCHES MIN OVER COPPER UNDERPLATED.

QUANTITY PER ASSY		PARTS LIST			
	1	RED	SILICONE RUBBER	GASKET	2
	1	NOTE 1	BRASS	SHELL	1
	2501432–1	FINISH/PLATING	MATERIAL	DESCRIPTION	ITEM

THIS DRAWING IS A CONTROLLED DOCUMENT.

DIMENSIONS: mm

TOLERANCES UNLESS OTHERWISE SPECIFIED:
0 PLC ± 0.3
1 PLC ± 0.2
2 PLC ± 0.1
3 PLC ± 0.05
4 PLC ± –
ANGLES ± 5

MATERIAL: SEE TABLE

FINISH: –

DWN TP 27JAN2025
CHK TP 27JAN2025
APVD WK 27JAN2025
PRODUCT SPEC —
APPLICATION SPEC —
WEIGHT 6.9 G

TE Connectivity

NAME: TNC PLUG PROTECTION CAP
–
–

SIZE	CAGE CODE	DRAWING NO	RESTRICTED TO
A3	00779	C–2501432	—

CUSTOMER DRAWING

SCALE 1:1 | SHEET 1 OF 1 | REV A

1470–19 (1/15)