REV.	ECN NO.	DATE	SIGN	DESCRIPTION
A	Initial Release	2015/11/10	Fisher	Change To Rev.A
B	C251049	2025/08/18	Mingxin Gao	B X2

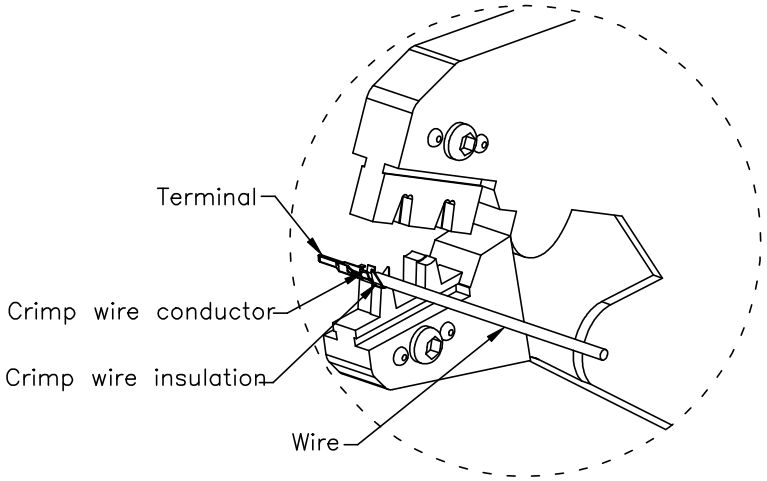

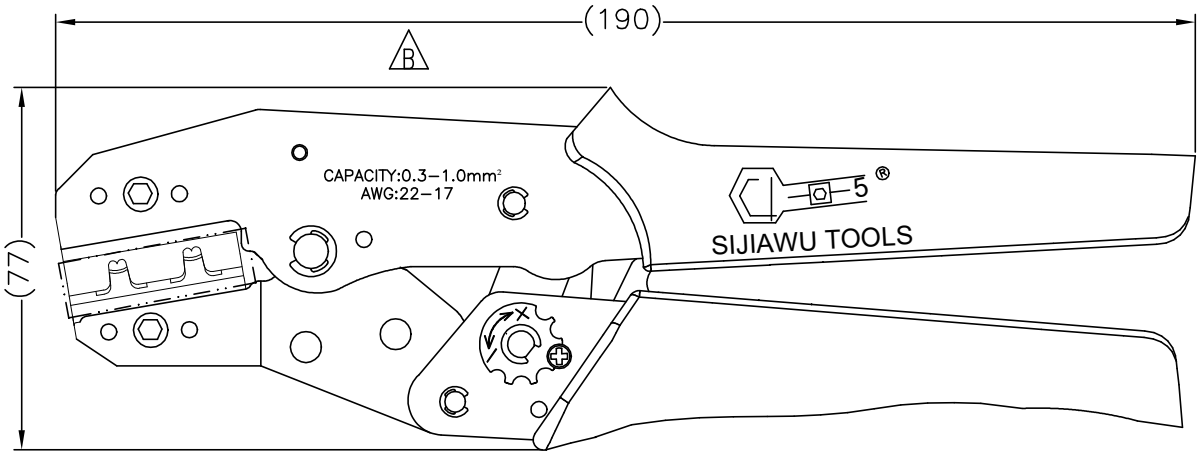

Front View

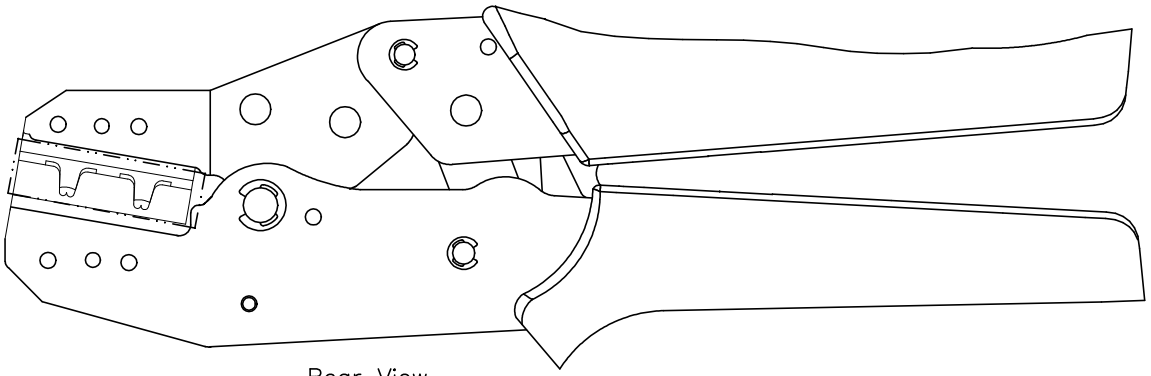

Rear View

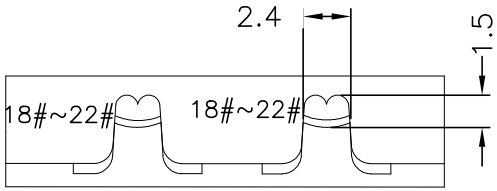

Front View

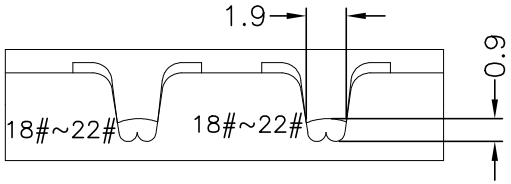

Rear View

B Note:

* QC Important Dimension.
* Tool Material: 特殊鋼 , Black; Jack color is red black
* Applicable wire range: 18~22AWG(0.32~0.85mm²)
* Tool weight: 0.35Kg

UNIT:mm	TITLE: SSL1.2 CRIMPING TOOL	Amphenol LTW 安費諾亮泰企業股份有限公司	ITEM NO: CTL–204501	DRAWN BY: Mingxin Gao	DATE: 2025/08/18
TOLERANCE	SCALE: Free / SHEET: 1 OF 1		DWG NO: CTL–204501	CHECKED BY: Henry Xu	DATE: 2025/08/18
	REV.: B / SIZE: A4 / QC :Inspection Item		CUSTOMER: ALTW	APPROVED BY: Fisher Wang	DATE: 2025/08/18

THIS DOCUMENT IS SUBJECT TO CHANGE WITHOUT NOTICE. IT IS CONFIDENTIAL AND A PROPERTY OF Amphenol LTW. DISCLOSURE TO THIRD PARTY HAS TO BE AUTHORIZED BY Amphenol LTW.