PART NO.	ENG. NO.	FINISHED LENGTH
1300540051	ER1PAB3004M002	0.2M [7.87 IN]
1300540043	ER1PAB3004M005	0.5M [1 FT 8 IN]
1300540044	ER1PAB3004M010	1M [3 FT 3 IN]
1300540049	ER1PAB3004M100	10M [32 FT 10 IN]

ER1PAB3004M005

LENGTH
M001 = .1 METERS
M010 = 1.0 METERS
M100 = 10 METERS

PART NUMBER MATRIX

TOLERANCE CHART					
FINISH LENGTH [FT]		TOLERANCE [IN]	FINISH LENGTH [M]		TOLERANCE [mm]
OVER	UNDER		OVER	UNDER	
0.00	.167	N/A	0.0	0.05	NA
.167	.500	+.63 -0	0.05	0.15	+16 -0
.500	1.00	+.75 -0	0.15	0.3	+19 -0
1.00	3.00	+1.75 -0	0.3	0.9	+44.5 -0
3.00	6.00	+2.19 -0	0.9	1.8	+55.6 -0
6.00	12.00	+3.50 -0	1.8	3.7	+88.8 -0
12.00	24.00	+6.50 -0	3.7	7.3	+165.1 -0
24.00	48.00	+12.50 -0	7.3	21.9	+317.5 -0
48.00	96.00	+24.50 -0	21.9	29.3	+622.3 -0
96.00	~	+2.00% -0	29.3	~	+2% OF FIN LGTH

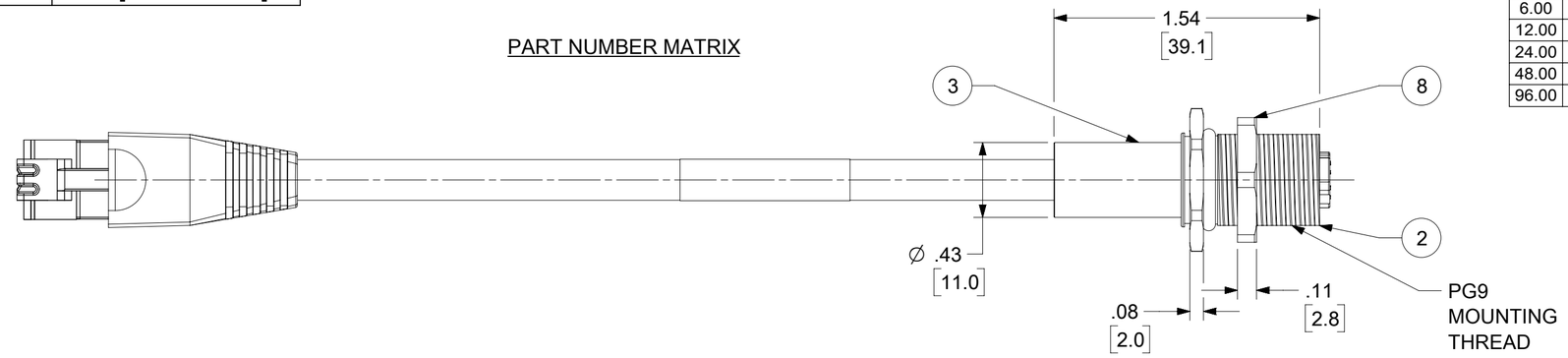

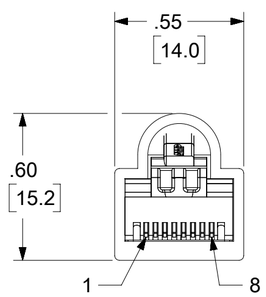

RJ45 PLUG
FACE VIEW
2X SCALE

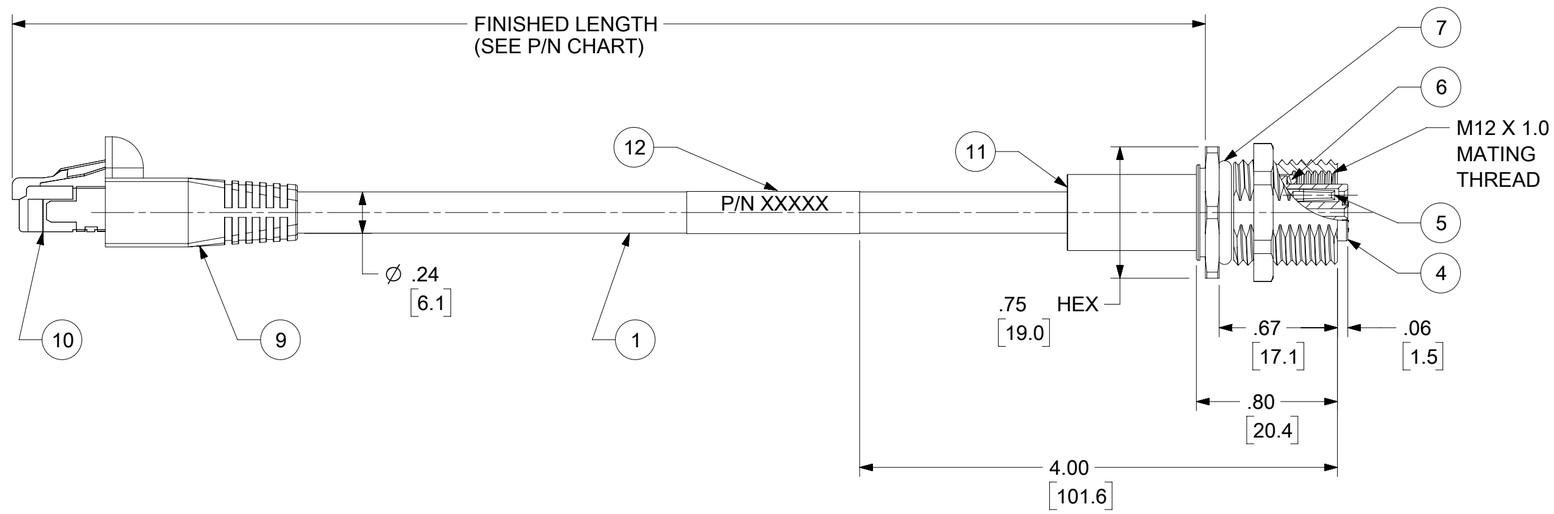

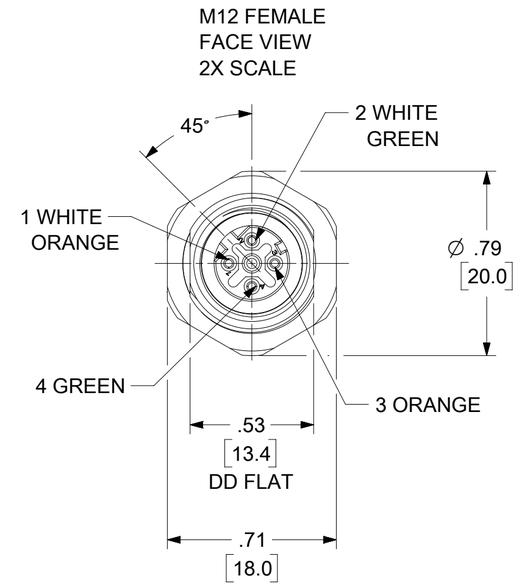

NOTES:
1. MATERIAL: AS NOTED
2. FINISH: AS NOTED
3. ELECTRICAL:
   VOLTAGE: 125V
   CURRENT: 1.5A
4. TEMP RATING: -25°TO +75°C
5. PROTECTION: IP67 (WHEN MATED)
6. UL LISTED FILE: E361772
7. ALL DIMS ARE FOR REFERENCE UNLESS TOLERANCED OR NOTED OTHERWISE

FLEX RATING	
ROLLING BEND	1 MILLION CYCLES AT 4 IN. DIA. MANDREL
	10 MILLION CYCLE TEST AT 8 IN DIA. MANDREL
TORSIONAL FLEX	3 MILLION CYCLES PER MIL C 13777G

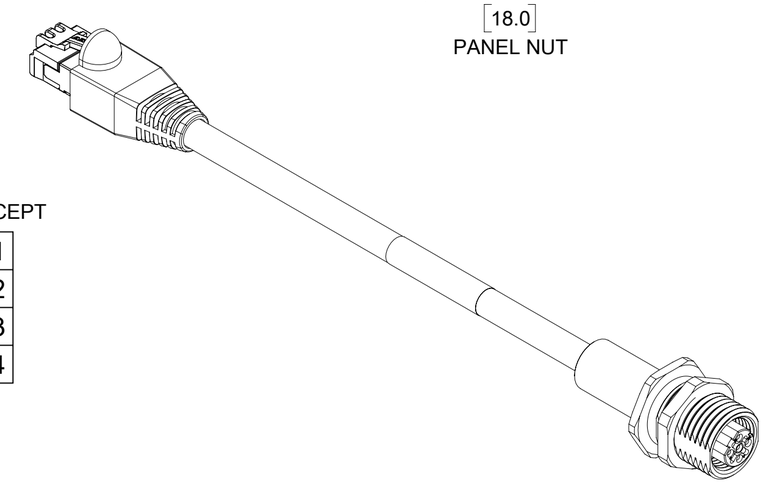

RJ45 / M12 RECEPT

RJ45		M12 RECEPT
1	WHITE/ORANGE	1
2	WHITE/GREEN	2
3	ORANGE	3
6	GREEN	4

WIRE DIAGRAM

ITEM	DESCRIPTION	MATERIAL	FINISH
12	WRAP LABEL	VINYL	YELLOW
11	POTTING MATERIAL	EPOXY	BLACK
10	RJ-45 PLUG, SHIELDED	PHOS-BRNZ CONT.	GOLD PLATED
9	RJ-45 BOOT	PVC	BLACK
8	PANEL NUT	BRASS	NICKEL PLATED
7	O-RING (PANEL)	VITON	BLACK
6	O-RING (MATING)	VITON	RED
5	CONTACT SOCKET	Cu ALLOY	GOLD PLATED
4	INSERT (D-CODE)	NYLON	BLACK
3	SLEEVE	BRASS	NICKEL PLATED
2	RECEPTACLE SHELL	BRASS	NICKEL PLATED
1	CABLE, 24AWG, 2 PAIR	TPE JACKET (HI-FLEX)	TEAL

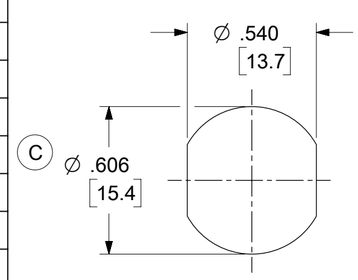

REF. PANEL KNOCKOUT

DOCUMENT STATUS	P1	RELEASE DATE	2024/11/18 16:24:33

FUNCTIONAL SYMBOLS: FA = 0, FC = 0, FP = 0
DIVISIONAL SYMBOLS

THIS DRAWING CONTAINS INFORMATION THAT IS PROPRIETARY TO MOLEX ELECTRONIC TECHNOLOGIES, LLC AND SHOULD NOT BE USED WITHOUT WRITTEN PERMISSION

DIMENSION UNITS: INCH/MM
SCALE: 1.5:1
GENERAL TOLERANCES (UNLESS SPECIFIED)

	MM	INCH
4 PLACES	±	±
3 PLACES	±	±
2 PLACES	±	±
1 PLACE	±	±
0 PLACES	±	±
ANGULAR TOL	±	°

DRAFT WHERE APPLICABLE MUST REMAIN WITHIN DIMENSIONS

CURRENT REV DESC: INSERT MATERIAL CHANGED FROM PUR TO NYLON. ITEM-12 FINISH WAS BLACK/YELLOW

EC NO:	800747	
DRWN:	ABENJAMINLW	2024/09/09
CHK'D:	LESPINOZA	2024/10/11
APPR:	BWOODMAN	2024/11/18
INITIAL REVISION:		
DRWN:	R.STONE	2020/05/18
APPR:	BWOODMAN	2020/06/11

THIRD ANGLE PROJECTION | DRAWING: C-SIZE | SERIES: 130054

molex

MICRO-CHANGE RECEPTACLE TO RJ45 PLUG
PG9 MOUNTING, 24AWG TPE HI-FLEX CABLE

PRODUCT CUSTOMER DRAWING

DOCUMENT NUMBER	DOC TYPE	DOC PART	REVISION
1300540043	PSD	000	C

MATERIAL NUMBER	CUSTOMER	SHEET NUMBER
SEE P/N CHART	GENERAL MARKET	1 OF 1

FORMAT: IN-master-tb-prod-C
REVISION: D
DATE: 2020/01/14