REV.	ECN NO.	DATE	SIGN	DESCRIPTION
B	LE3-880065	2008/08/20	Kathy Huang	Change The Clamp Ring & Gasket
C	LEN15B0047	2015/10/28	Ruru	Change Logo
D	C231296	2023/10/11	Vicky	△D X1

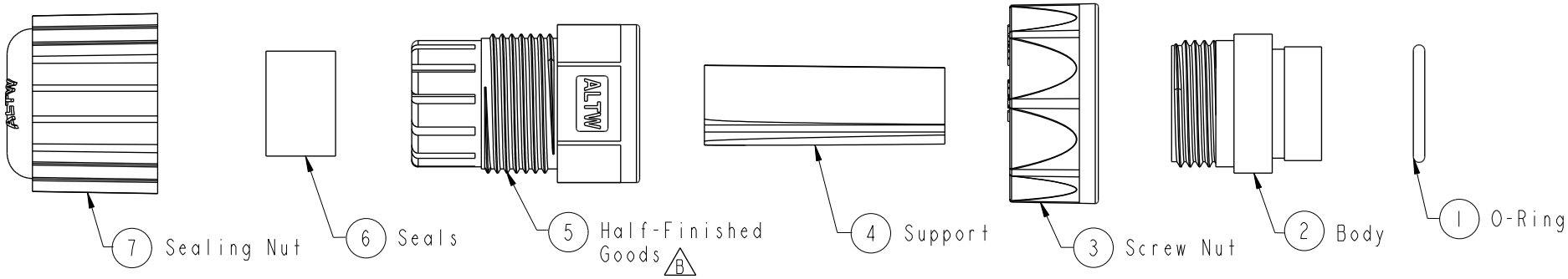

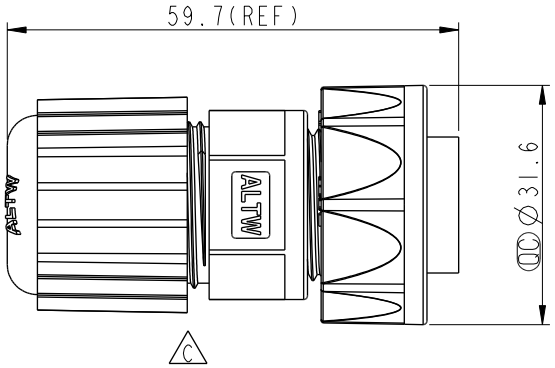

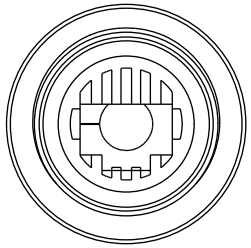

Note:
* QC Important Dimension
* Waterproof Rate: IP67
* O-Ring: EPDM, Black
* Body: Nylon+GF
* Screw Nut: Silver, ZINC
* Support: TPU, Black
△B * Half-Finished Goods: Nylon(Black)& Silicone(Gray_Black)
* Seals: EPDM, Black
* Sealing Nut: Nylon, Black
* Cable OD Max: Ø6.5
△D * One set unassembled in one pe bag

UNIT: mm

TOLERANCE
.X ±0.25
.XX ±0.1
.XXX ±0.05
ANGLES ±1°

TITLE: RJ45 Assy Screw M Conn M Pin			
SCALE 1:1	SIZE A4	SHEET 1 OF 1	
REV. D	WC-REV. A.1	QC: Inspection item	

Amphenol LTW
安費諾亮泰企業股份有限公司

ITEM NO RJ-00BMMA-SL7003	DRAWN BY Ruru	DATE 2015-10-28
DWG NO RJ-00BMMA-SL7003	CHECKED BY Rita	DATE 2015-10-28
CUSTOMER ALTW	APPROVED BY Lisa	DATE 2015-10-28

THIS DOCUMENT IS SUBJECT TO CHANGE WITHOUT NOTICE. IT IS CONFIDENTIAL AND A PROPERTY OF Amphenol LTW. DISCLOSURE TO THIRD PARTY HAS TO BE AUTHORIZED BY Amphenol LTW.