© TE Connectivity. All Rights Reserved.

REVISIONS					
P	LTR	DESCRIPTION	DATE	DWN	APVD
	B1	REVISED PER ECR-23-177173	09JUN2023	N.H	L.C

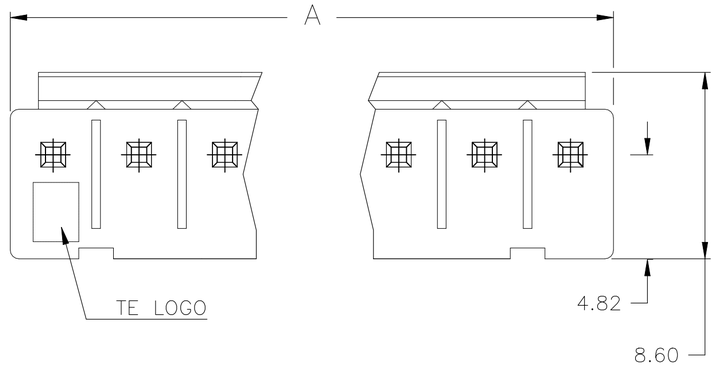

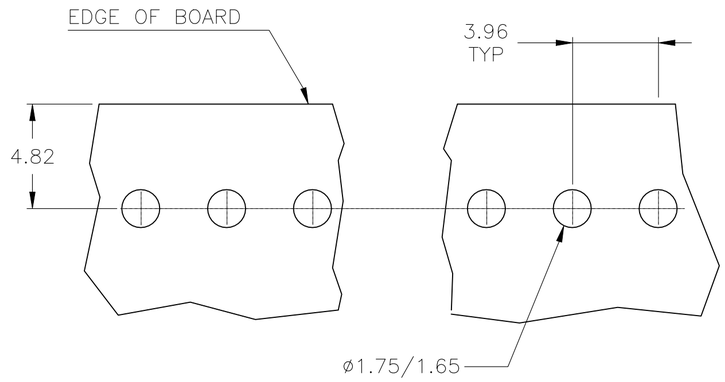

RECOMMENDED MOUNTING HOLE PATTERN
FOR 1.60 THICK PC BOARD

1. HOUSING MATERIAL: NYLON, UL94 V-0.
   PIN MATERIAL: BRASS.
2. PIN PLATING: MATTE TIN PLATED 3.0 MICROMETER MINIMUM.
3. DIMENSIONS SHOWN REPRESENT PRODUCT IN DRY, AS MOLDED, CONDITION.
   ADDITIONAL 2% GROWTH DUE TO SUBSEQUENT MOISTURE ABSORPTION MAY OCCUR AND SHOULD BE ACCOUNTED FOR
4. RECOMMENDED MATING PART: [ ]-1744416-[ ]
5. PACKAGING: LOOSE PIECE.
6. PER IEC 60335-1 SECT. 30, GWEPT 750C, NO FLAME or Te-Ti≤2S
7. PRODUCT BOW SHOULD MEET 0~0.08MM (INITIAL) AND 0~0.20MM(AFTER SOLDERABILITY)
8. HIGH TEMPERATURE VERSION, MEET HEAT RESISTANCE FOR SOLDERING TEMPERATURE 260~265°C, DURATION 5 +2/-0 Sec.

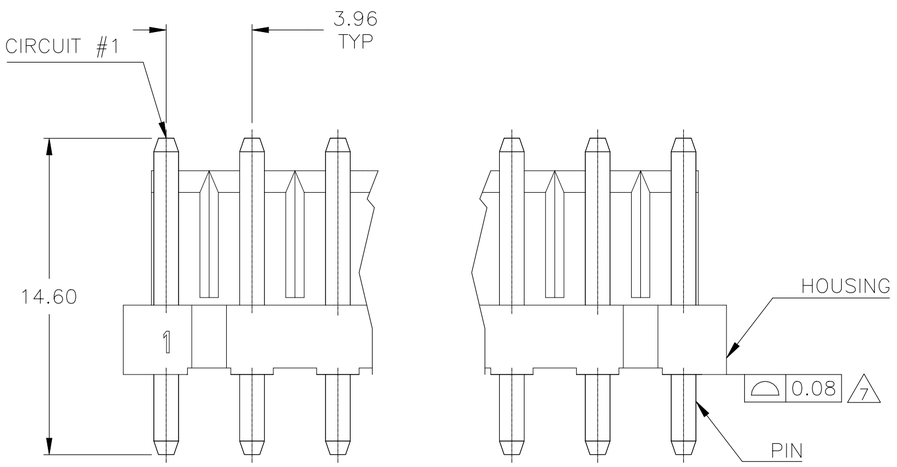

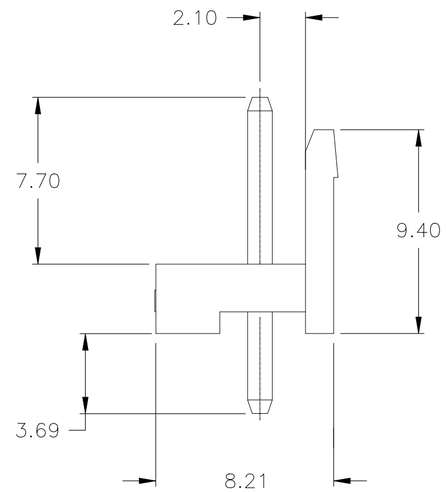

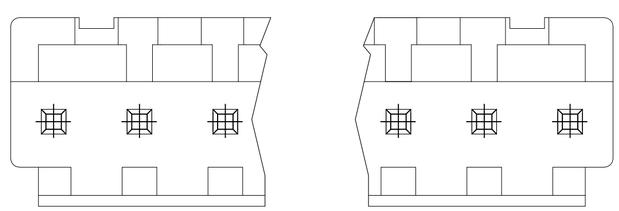

OMIT PIN #	NO. OF POSITIONS	COLOR	±0.30 DIM A	PART NUMBER
2	7	NATURAL	27.72	2-2410284-7
2	3	NATURAL	11.88	2-2410284-3
	9	NATURAL	35.64	2410284-9
	8	NATURAL	31.68	2410284-8
	7	NATURAL	27.72	2410284-7
	6	NATURAL	23.76	2410284-6
	5	NATURAL	19.80	2410284-5
	4	NATURAL	15.84	2410284-4
	3	NATURAL	11.88	2410284-3
	2	NATURAL	7.92	2410284-2

2410284

THIS DRAWING IS A CONTROLLED DOCUMENT.

DIMENSIONS: mm [INCHES]

TOLERANCES UNLESS OTHERWISE SPECIFIED:
0 PLC ± -
1 PLC ± 0.5
2 PLC ± 0.30
3 PLC ± -
4 PLC ± -
ANGLES ± 3°

MATERIAL 1
FINISH 2

DWN W. HUO 16MAR2022
CHK L. CHEN 17MAR2022
APVD D. ZHANG 18MAR2022
PRODUCT SPEC 108-2297
APPLICATION SPEC 114-13265
WEIGHT —

TE Connectivity

NAME HEADER ASSEMBLY-ECONOMY POWER VERTICAL

SIZE	CAGE CODE	DRAWING NO	RESTRICTED TO
A2	00779	C-2410284	—

CUSTOMER DRAWING | SCALE 5:1 | SHEET 1 OF 1 | REV B1