THIS DRAWING IS UNPUBLISHED. RELEASED FOR PUBLICATION 2017
© COPYRIGHT 2017 TE Connectivity Germany GmbH ALL RIGHTS RESERVED.

REVISIONS					
P	LTR	DESCRIPTION	DATE	DWN	APVD
	A2	PN -3 ADDED. PN 9- -1 AND 9- -2 REMOVED	15MAR2023	EC	BD
	A3	PN -3 UPDATED BEFORE TOOL LAUNCH	31MAR2023	EC	BD
	A4	PN -3 OBSOLETED	18JUN2024	EC	BD
	A5	PN -3 RE-ACTIVATED	28JUL2025	CV	BD

NOTES:

1. TE PART NUMBER = P/N
2. CAVITY MARKING
3. PART REVISION
4. TE-TRADEMARK
5. MATERIAL MARKING
6. PACKAGING ACCORDING TO SPEC. 107-15767
7. WIRE CAVITY MARKINGS

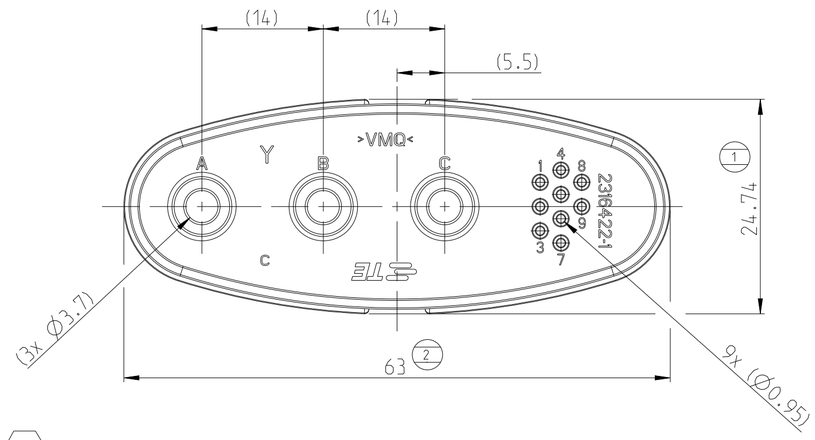

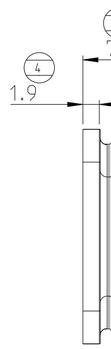

P/N 2316422-1
AS SHOWN

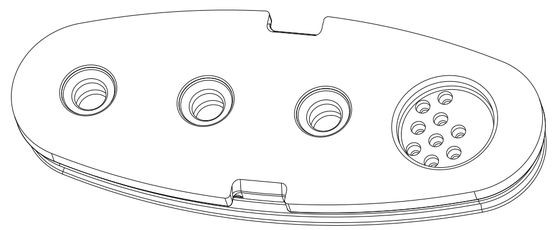

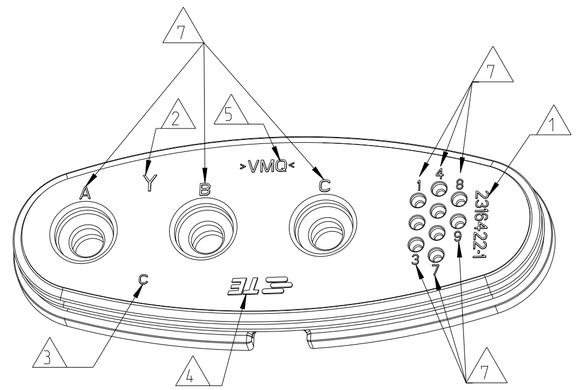

A5

P/N 2316422-3
AS SHOWN

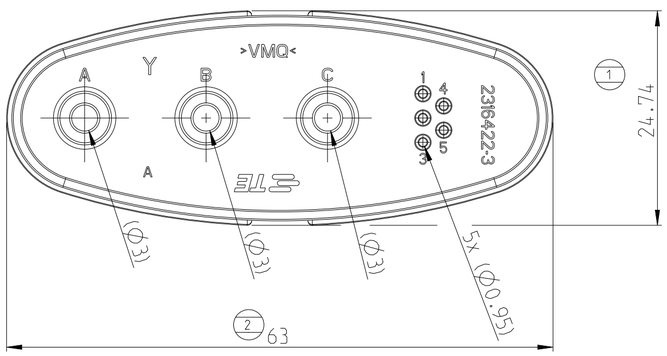

P/N 2316422-2
AS SHOWN

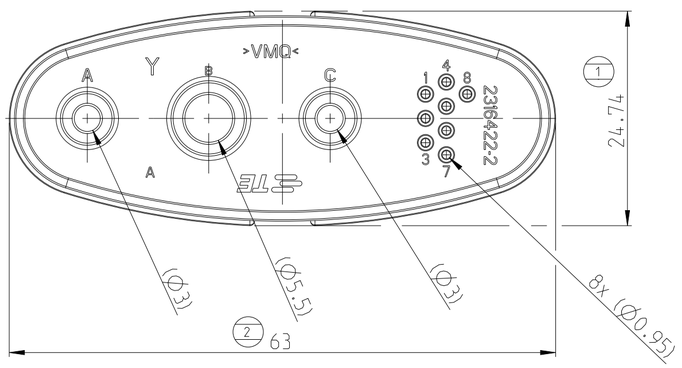

A5

TE-PART-NO.	REV	DESCRIPTION	MATERIAL	WEIGHT [g]	COLOUR
2316422-3	A	FAMILY SEAL AC 1PH, PE6MM2 5X SIGNAL	VMQ (SILICONE RUBBER 30sh)	8	RED
2316422-2	A	FAMILY SEAL AC 1PH	VMQ (SILICONE RUBBER 30sh)	8	YELLOW
2316422-1	C	FAMILY SEAL AC 1PH	VMQ (SILICONE RUBBER 30sh)	8	NATURAL

THIS DRAWING IS A CONTROLLED DOCUMENT.

DIMENSIONS: mm

TOLERANCES UNLESS OTHERWISE SPECIFIED:
0 PLC ±
1 PLC ±
2 PLC ± 0.5
3 PLC ±
4 PLC ±
ANGLES ± 2°

MATERIAL: SEE TABLE

FINISH: -

DWN Arun Kumar S 08MAY2017
CHK Vishwa A 08MAY2017
APVD B. DUPONT 07DEC2017
PRODUCT SPEC -
APPLICATION SPEC -
WEIGHT SEE TABLE

TE Connectivity

NAME FAMILY SEAL, AC

SIZE A2 | CAGE CODE 00779 | DRAWING NO C-2316422 | RESTRICTED TO -

CUSTOMER DRAWING | SCALE 2:1 | SHEET 1 OF 1 | REV A5