SV7614

Vortex flow meter with display

SVN34XXX50KG/US-100

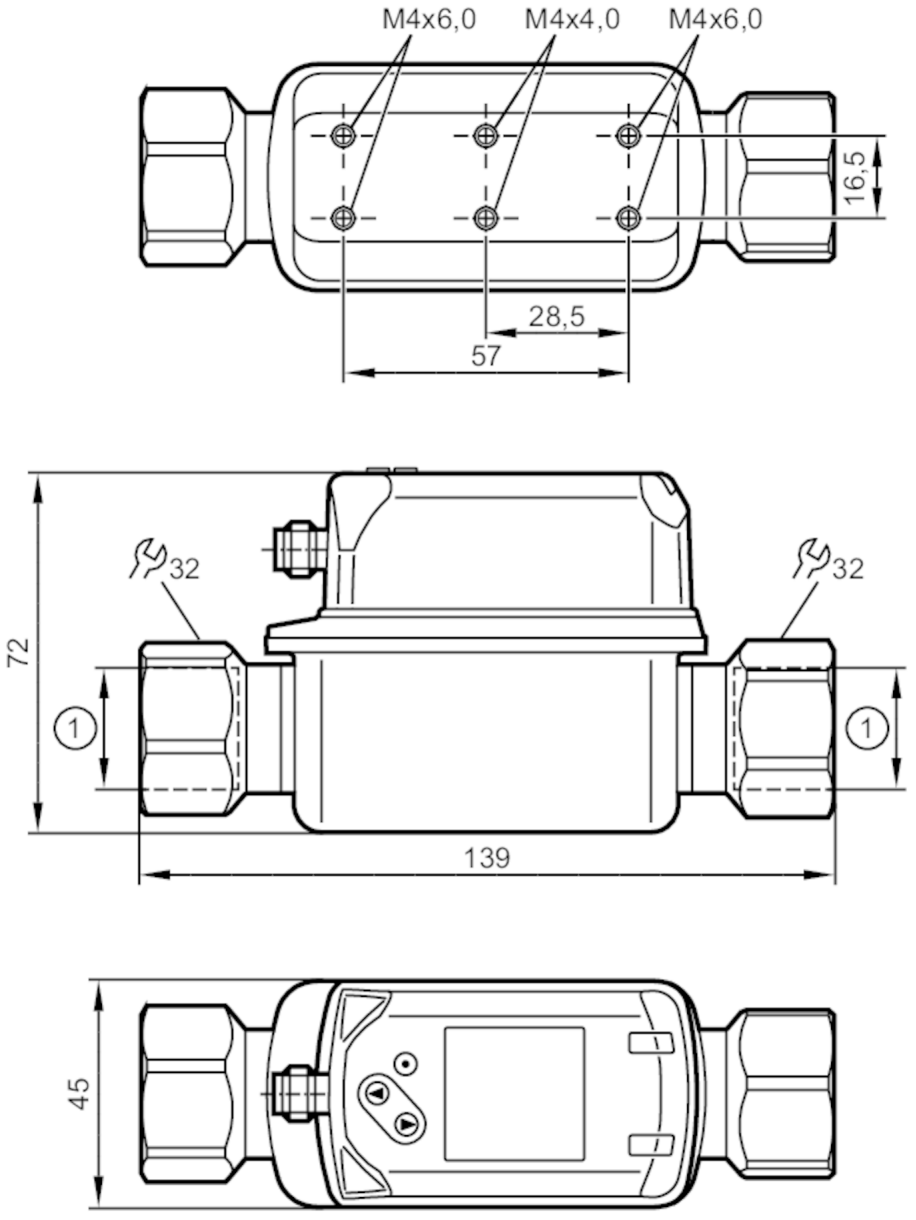

1 3/4" NPT
DN 20

Product characteristics		
Number of inputs and outputs	Number of analogue outputs: 2	
Measuring range	80...1585 gph	1.3...26.4 gpm
Process connection	threaded connection 3/4" NPT internal thread DN20	

Application	
Special feature	Gold-plated contacts
Application	for industrial applications
Media	water; glycol solutions; coolants
Medium temperature [°F]	14...194

SV7614

Vortex flow meter with display

SVN34XXX50KG/US-100

Pressure rating		12 bar	174 psi	1.2 MPa
Note on pressure rating		up to 40 °C		
MAWP for applications according to CRN	[bar]	4.3		
Electrical data				
Operating voltage	[V]	18...30 DC		
Current consumption	[mA]	< 30		
Min. insulation resistance	[MΩ]	100; (500 V DC)		
Protection class		III		
Reverse polarity protection		yes		
Power-on delay time	[s]	< 3		
Measuring principle		Vortex		
Inputs / outputs				
Number of inputs and outputs		Number of analogue outputs: 2		
Outputs				
Total number of outputs		2		
Output signal		analogue signal		
Number of analogue outputs		2		
Analogue current output	[mA]	4...20		
Max. load	[Ω]	500		
Short-circuit protection		yes		
Overload protection		yes		
Measuring/setting range				
Measuring range		80...1585 gph	1.3...26.4 gpm	
Display range		0...1900 gph	0...31.7 gpm	
Resolution		5 gph	0.1 gpm	
Analogue start point ASP		0...1270 gph	0...21.1 gpm	
Analogue end point AEP		315...1585 gph	5.3...26.4 gpm	
In steps of		5 gph	0.1 gpm	
Measuring dynamics		1:20		
Temperature monitoring				
Measuring range	[°F]	14...194		
Display range	[°F]	-22...230		
Resolution	[°F]	1		
Analogue start point	[°F]	14...158		
Analogue end point	[°F]	50...194		
In steps of	[°F]	1		
Accuracy / deviations				
Flow monitoring				
Accuracy (in the measuring range)		± 2 % MEW; (water)		
Repeatability		± 0,5 % MEW		
Temperature monitoring				
Accuracy	[K]	± 1		

SV7614

Vortex flow meter with display

SVN34XXX50KG/US-100

Response times			
Flow monitoring			
Response time	[s]	1; (dAP = 0)	
Damping process value dAP	[s]	0...5	
Temperature monitoring			
Dynamic response T05 / T09	[s]	T09 = 6	
Software / programming			
Parameter setting options		Damping for the analogue output dAA; Display unit	
Operating conditions			
Ambient temperature	[°F]	32...140	
Note on ambient temperature		medium temperature < 176 °F	
		medium temperature < 194 °F: 32...122 °F	
Storage temperature	[°F]	-4...176	
Protection		IP 65; IP 67	
Tests / approvals			
EMC		DIN EN 61000-6-2	
		DIN EN 61000-6-3	
Shock resistance		DIN EN 60068-2-27	5 g (11 ms)
Vibration resistance		DIN EN 60068-2-6	with water / 10...50 Hz 1 mm
			with water / 50...2000 Hz 2 g
MTTF	[years]	342	
UL approval		UL approval no.	I002
Pressure Equipment Directive		Sound engineering practice; can be used for group 2 fluids; group 1 fluids on request	
Mechanical data			
Weight	[g]	514.5	
Housing		rectangular	
Dimensions	[mm]	139 x 45 x 72	
Materials		stainless steel (316L/1.4404); PC; PBT+PC-GF30; PPS; TPE-U	
Materials (wetted parts)		stainless steel (316L/1.4404); ETFE; PA 6T; PPS; FKM	
Tightening torque	[Nm]	30	
Process connection		threaded connection 3/4" NPT internal thread DN20	
Displays / operating elements			
Display			colour display 1,44", 128 x 128 pixels
			2 x LED, yellow
Remarks			
Remarks		MW = measured value	
		MEW = Final value of the measuring range	
Pack quantity		1 pcs.	

SV7614

Vortex flow meter with display

SVN34XXX50KG/US-100

Electrical connection

Connector: 1 x M12; coding: A; Contacts: gold-plated

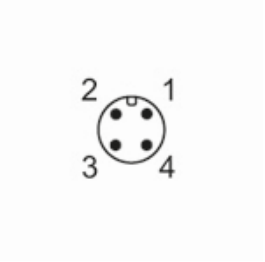

Connection

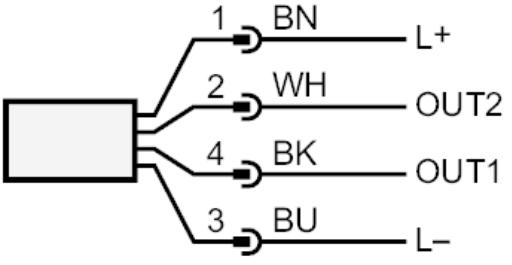

OUT1:	analogue output Temperature monitoring
OUT2:	analogue output volumetric flow quantity monitoring
	colours to DIN EN 60947-5-2
	Core colours :
BK =	black
BN =	brown
BU =	blue
WH =	white

Diagrams and graphs

Pressure loss

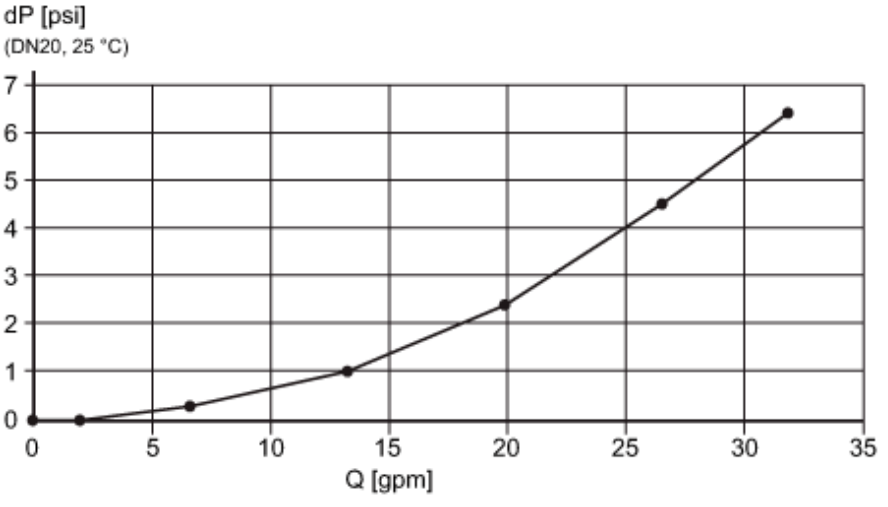

dP Pressure loss

Q volumetric flow quantity

SV7614

Vortex flow meter with display

SVN34XXX50KG/US-100
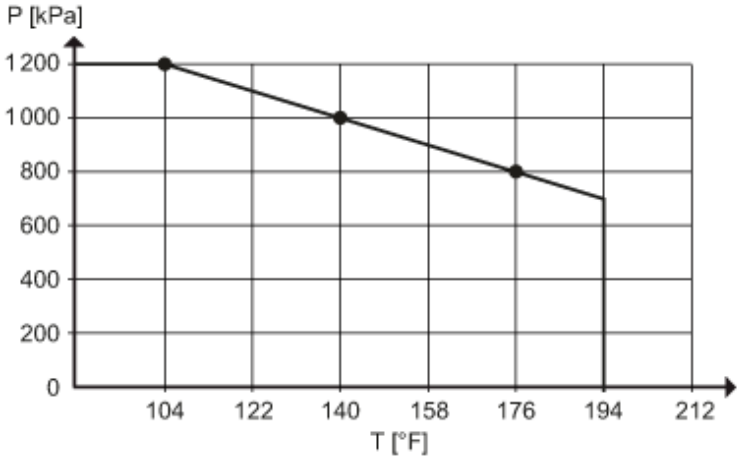
pressure rating (bar)