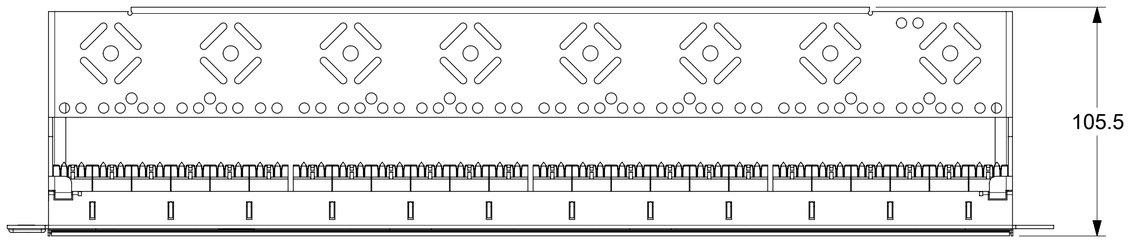

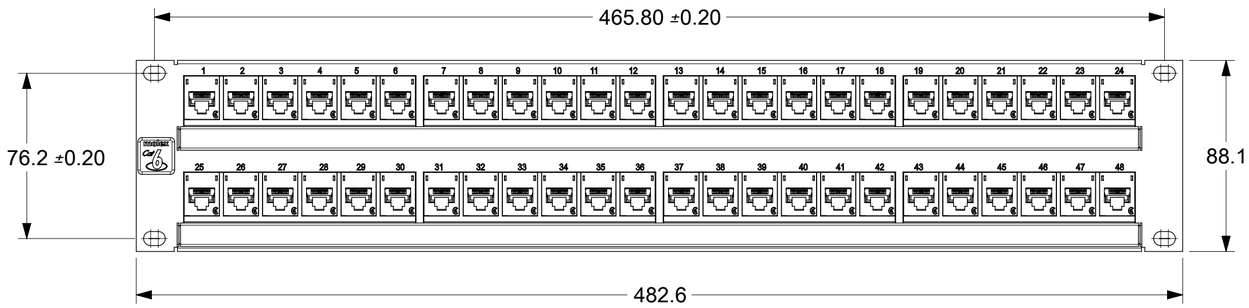

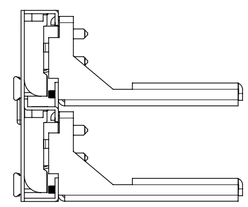

NOTES:

1) MATERIAL:
   a) PANEL AND CABLE MANAGEMENT TRAY : COLD ROLLED STEEL (CRS)
   b) BEZELS : POLYCARBONATE (PC), COLOR - BLACK
   c) JACK AND IDC HOUSINGS : POLYCARBONATE (PC) UL94-V0 RATED
   d) JACK AND IDC CONTACTS : COPPER ALLOY
   e) LABEL HOLDERS : POLYCARBONATE (PC)
   f) LABEL EXTRUSION : POLYVINYL CHLORIDE (PVC).

2) FINISH :
   a) PANEL : GRAY OR BLACK POWDERCOAT.
   b) CABLE MANAGEMENT TRAY : BLACK POWDERCOAT
   c) JACK CONTACTS : SELECTIVE GOLD (Au) OVER NICKEL (Ni)
   d) IDC CONTACTS : TIN (Sn) OVER NICKEL (Ni)
   e) LABEL HOLDERS AND LABEL EXTRUSIONS : WATER CLEAR.

3) CABLE MANAGEMENT TRAY, LABELS AND LABEL EXTRUSIONS ARE SHOWN IN ASSEMBLED CONDITION IN THE DRAWING, WHERE AS THEY ARE PACKED INDIVIDUALLY IN A BOX.

4) PACKAGING : PANEL IS PACKED IN CORRUGATED BOX.
   THE FOLLOWING ITEMS ARE INCLUDED:
   - HARDWARE KIT
   - LABELS AND LABEL EXTRUSIONS
   - CABLE MANAGEMENT TRAY

5) PRODUCT PACKAGING LABEL CONTAINS QR CODE FOR INSTALLATION INSTRUCTIONS AND WHERE QR CODE IS NOT AVAILABLE HARD COPY WILL BE SUPPLIED.

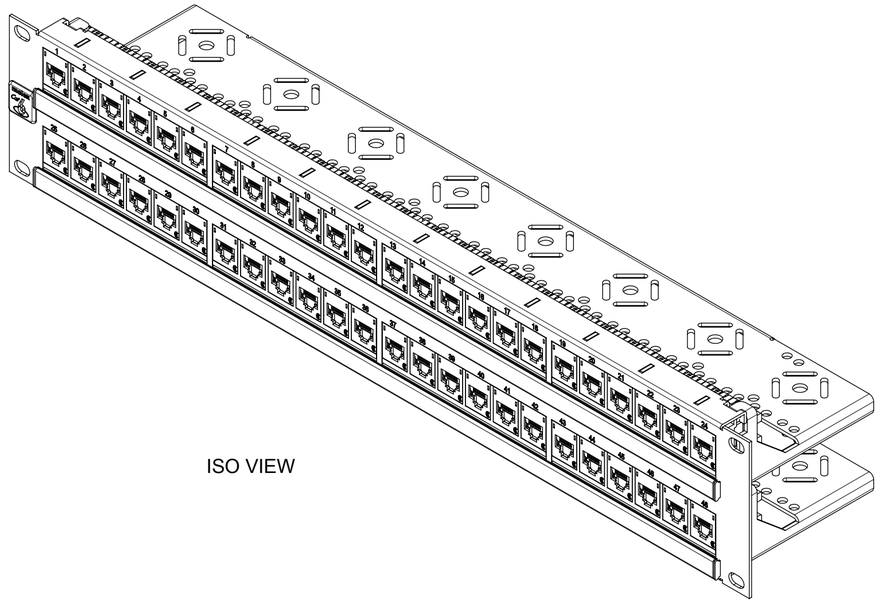

ISO VIEW

PART NUMBER TABLE:

MPN NO.	SAP NO.	DESCRIPTION	REMARKS
PID-00142-04	182090026	PATCH PANEL CAT6 2U 48PORT 568A/B BLACK	
PID-00142-04-I	182090029	PATCH PANEL CAT6 2U 48PORT 568A/B BLACK- IN	FOR INDIA MARKET ONLY
PID-00142-04	182090041	PATCH PANEL CAT6 2U 48PORT 568A/B BLACK (USA MARKET)	FOR USA MARKET ONLY

THIS DRAWING CONTAINS INFORMATION THAT IS PROPRIETARY TO MOLEX ELECTRONIC TECHNOLOGIES, LLC AND SHOULD NOT BE USED WITHOUT WRITTEN PERMISSION

FUNCTIONAL SYMBOLS: EA = 0, EC = 0, EP = 0
DIVISIONAL SYMBOLS

DIMENSION UNITS: mm
SCALE: 1:2
GENERAL TOLERANCES (UNLESS SPECIFIED)
ANGULAR TOL ± °
4 PLACES ±
3 PLACES ±
2 PLACES ±
1 PLACE ± 2.0
0 PLACES ±
DRAFT WHERE APPLICABLE MUST REMAIN WITHIN DIMENSIONS

CURRENT REV DESC:
EC NO: 795107
DRWN: ANILM3 2024/09/24
CHK'D: NKUMAR02 2024/11/06
APPR: NKUMAR02 2024/11/06
INITIAL REVISION:
DRWN: PS03 2009/10/12
APPR: JKUMAR 2009/10/13

molex

PATCH PANEL CAT6 2U 48PORT 568A/B

PRODUCT CUSTOMER DRAWING

DOCUMENT NUMBER	DOC TYPE	DOC PART	REVISION
SD-18209-006	PSD	001	C4

THIRD ANGLE PROJECTION | DRAWING: A2-SIZE | SERIES: 18209 | MATERIAL NUMBER: SEE TABLE | CUSTOMER: GENERAL MARKET | SHEET NUMBER: 1 OF 1

DOCUMENT STATUS	P1	RELEASE DATE	2024/11/06 18:18:00

FORMAT: 2009-Grid-A2
REVISION: 1
DATE: 2009/10/14