PART NUMBER	CHANNELS	TYPE	PINOUT (SEE CHARTS)	INSERTION LOSS SPEC PER ASSEMBLY (SEE NOTE 2)	POLISH TYPE
1060051000	12	SM	12 CHANNEL STANDARD	1.5 dB	APC
1060051001		MM 50/125		1.0 dB	PC
1060051003		MM 50/125 5dB ATTEN		5 ±1 dB	APC
1060051500	8	SM	8 CHANNEL STANDARD	1.5 dB	APC
1060051502		MM 62.5/125		1.0 dB	PC
1060051100	12	MM 50/125	12 CHANNEL QSFP	1.0 dB	PC
1060051102				2 ±1 dB	APC
1060051007		SM		1.5 dB	APC

12 CHANNEL STD
FIBER 1 TO 7
2 TO 8
3 TO 9
4 TO 10
5 TO 11
6 TO 12

12 CHANNEL QSFP
FIBER 1 TO 12
2 TO 11
3 TO 10
4 TO 9
5, 6, 7, 8 EMPTY

8 CHANNEL STD
FIBER 1 TO 5
2 TO 6
3 TO 7
4 TO 8

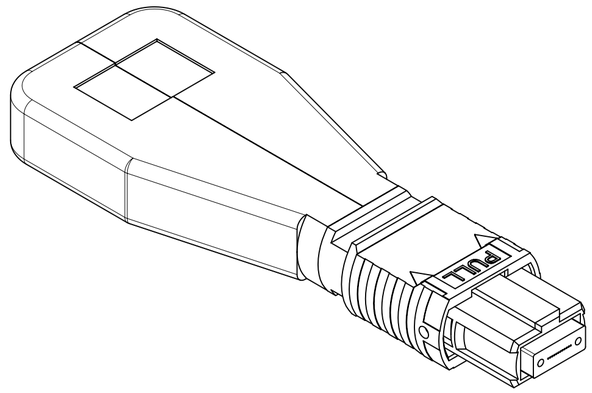

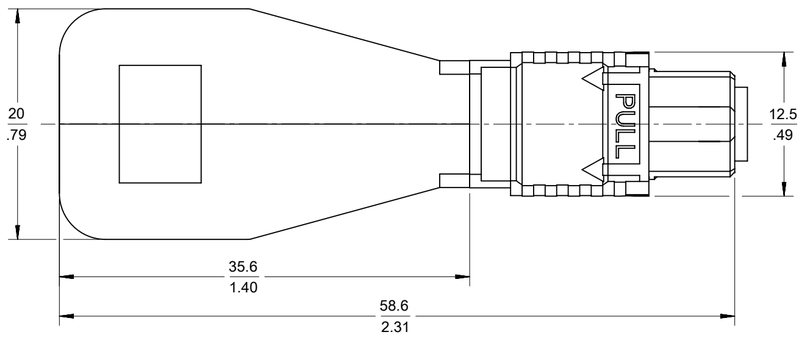

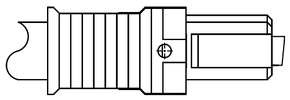

DETAIL A
FOR SM ANGLE POLISH
(SEE TABLE)

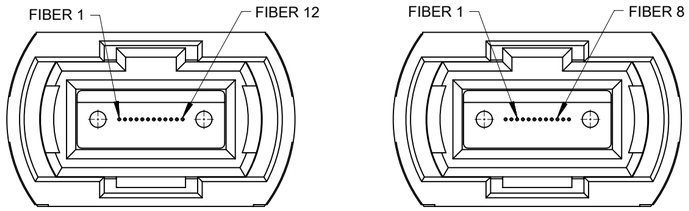

SM ANGLE POLISH IS SHOWN

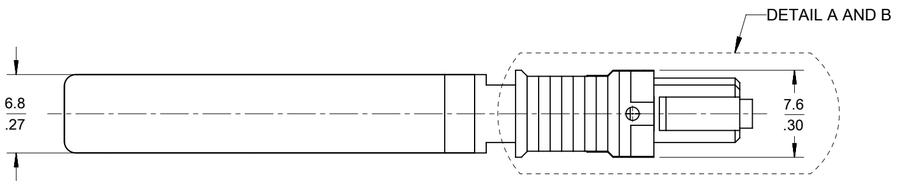

MM PC POLISH IS SHOWN

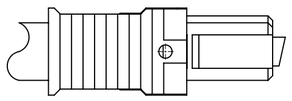

DETAIL B
FOR MM ANGLE POLISH
(SEE TABLE)

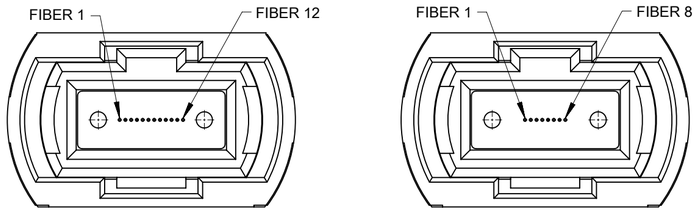

MM PC AND ANGLE POLISH ARE SHOWN

PIN OUT DIAGRAMS

NOTES:

1. LOOPBACK ASSEMBLY AND ITS COMPONENTS SHALL COMPLY WITH EU DIRECTIVE 2011/65/EU ON THE RESTRICTION OF THE USE OF HAZARDOUS SUBSTANCES IN ELECTRICAL AND ELECTRONIC EQUIPMENT (RoHS).

2. INSERTION LOSS (IL) SHOWN IS PER CHANNEL (2 MATED PAIRS).

DOCUMENT STATUS	P1	RELEASE DATE	2023/11/16 07:39:23

FUNCTIONAL SYMBOLS: FA = 0, FC = 0, FP = 0

DIVISIONAL SYMBOLS

THIS DRAWING CONTAINS INFORMATION THAT IS PROPRIETARY TO MOLEX ELECTRONIC TECHNOLOGIES, LLC AND SHOULD NOT BE USED WITHOUT WRITTEN PERMISSION

DIMENSION UNITS: MM/INCH — SCALE: 2.5:1

GENERAL TOLERANCES (UNLESS SPECIFIED)

ANGULAR TOL	± 1.0 °
4 PLACES	±
3 PLACES	±
2 PLACES	±
1 PLACE	±
0 PLACES	±

DRAFT WHERE APPLICABLE MUST REMAIN WITHIN DIMENSIONS

CURRENT REV DESC: REMOVED OBSOLETED PART NUMBERS

EC NO: 768949
DRWN: VISHAH2 2023/10/31
CHK'D: GGA 2023/11/16
APPR: GGA 2023/11/16

INITIAL REVISION:
DRWN: SERNST 2007/11/26
APPR: WCHEN 2007/11/28

THIRD ANGLE PROJECTION | DRAWING: C-SIZE | SERIES: 106005

molex

LOW PROFILE
MTP LOOPBACK CONNECTOR

PRODUCT CUSTOMER DRAWING

DOCUMENT NUMBER	DOC TYPE	DOC PART	REVISION
SD-106005-1000	PSD	001	G1

MATERIAL NUMBER	CUSTOMER	SHEET NUMBER
SEE TABLE	GENERAL MARKET	1 OF 1

FORMAT: master-tb-prod-C
REVISION: J1
DATE: 2021/05/01