REV.	ECN NO.	DATE	SIGN	DESCRIPTION
A	-	2025/03/10	Zed	Rev.01 to Rev.A
B	C250800	2025/06/17	Wenxiang	B XI
C	C251023	2025/08/13	Wenxiang	C XI

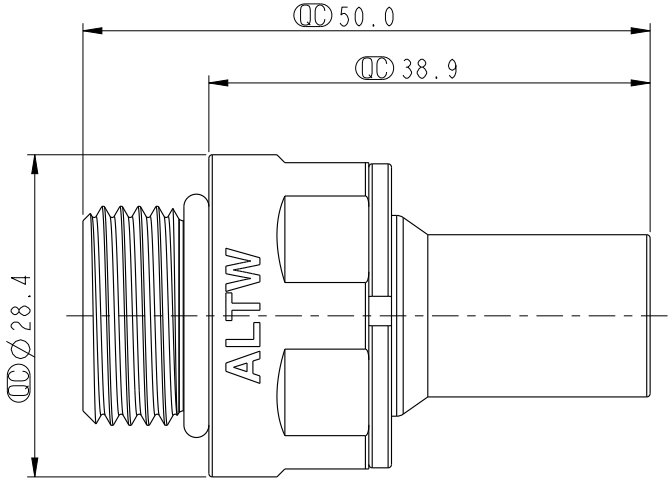

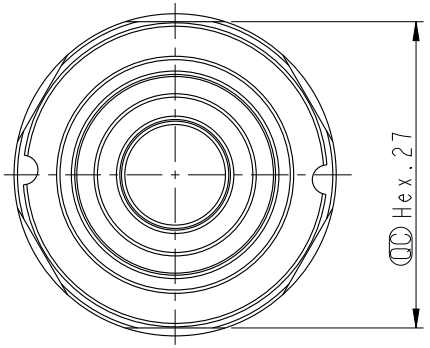

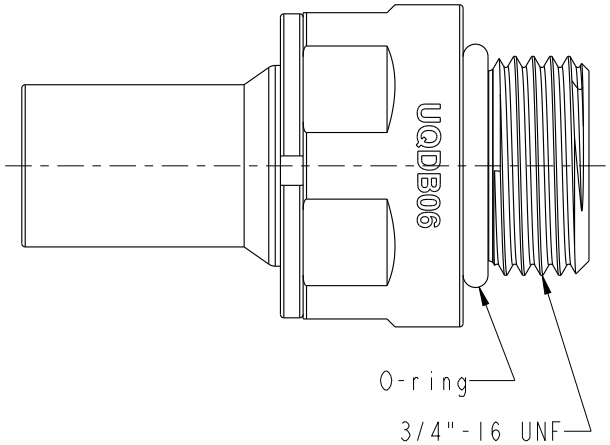

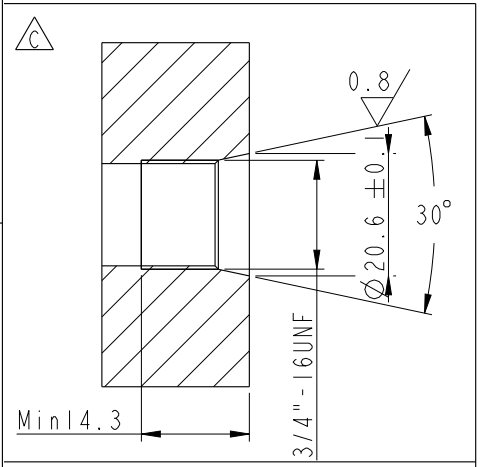

Recommended
Panel Cut-Out

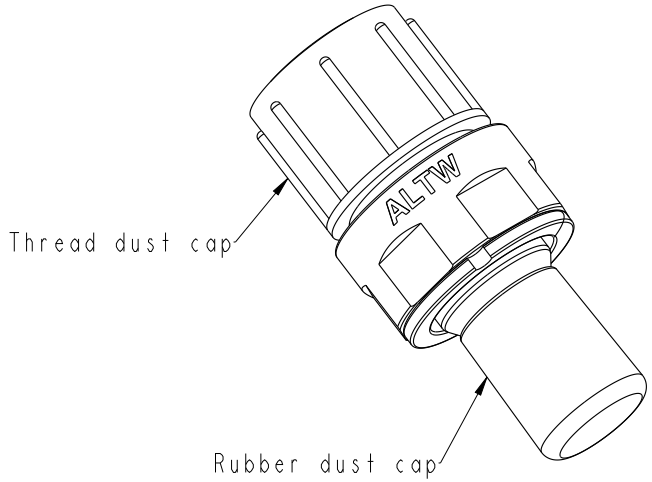

Note:
* RoHS Compliant
* QC Important dimension
* O-ringl: Rubber black
* Connection Type: 3/4"-16 UNF male thread
* Rubber dust cap: Thermoplastic, Black
* Therad dust cap: Thermoplastic, Yellow
* Nominal Diameter: DN7
* Weight: Ref.80.3G/PCS B

UNIT: mm	TITLE: SNAPQD BLIND-MATE, PLUG, NO COLOR 3/4"-16 UNF THREAD, MALE	Amphenol LTW 安費諾亮泰企業股份有限公司	ITEM NO: SQDB-06PAFM-BNA001	DRAWN BY: Wenxiang Li	DATE: 2025/06/17
TOLERANCE ±0.5	SCALE: 1:1 / SIZE: A4 / SHEET 1 OF 1		DWG NO: SQDB-06PAFM-BNA001	CHECKED BY: Vic	DATE: 2025/06/17
	REV.: C / WC-REV.: .0	QC: Inspection item	CUSTOMER: ALTW	APPROVED BY: Jerry	DATE: 2025/06/17

THIS DOCUMENT IS SUBJECT TO CHANGE WITHOUT NOTICE. IT IS CONFIDENTIAL AND A PROPERTY OF Amphenol LTW. DISCLOSURE TO THIRD PARTY HAS TO BE AUTHORIZED BY Amphenol LTW.