REV.	ECN NO.	DATE	SIGN	DESCRIPTION
D	C191496	2019-08-29	NianPing Yu	Add UL Label
E	C192063	2019-12-03	NianPing Yu	(E) X1
F	C220940	2022-06-20	Ruru	(F) X3

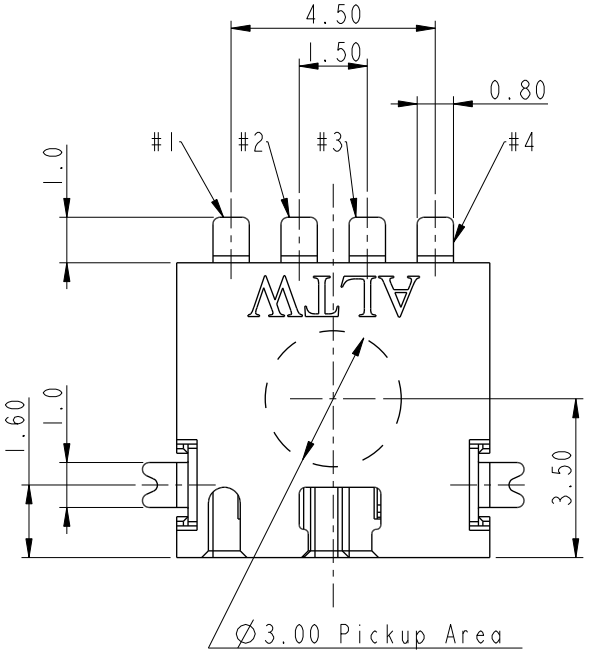

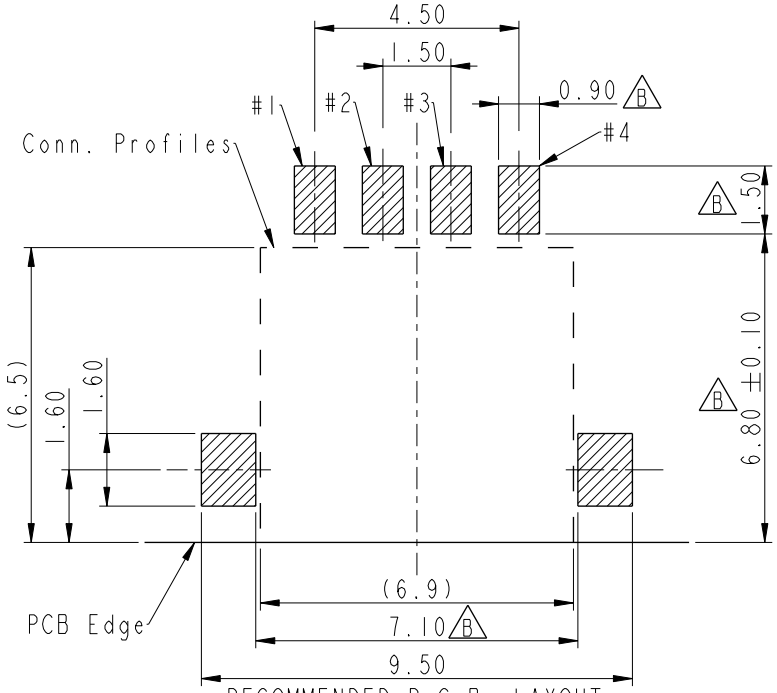

RECOMMENDED P.C.B. LAYOUT
GENERAL TOLERANCE IS ±0.05

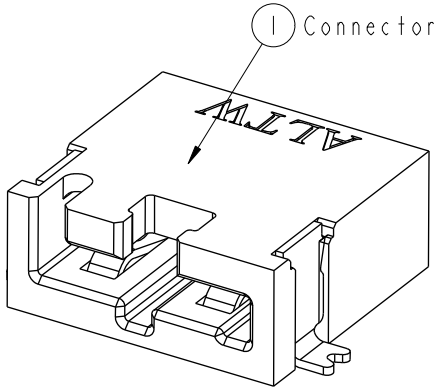

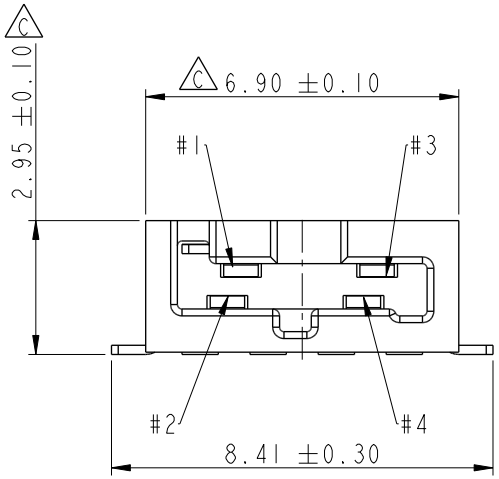

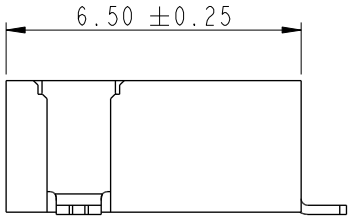

(QC) 0.12
All Soldertails

Notes:
* (QC) Important Dimension To Check.
* Housing: High temperature thermoplastic. UL94V-0, color is Natural white.
* (C)(B) Terminal: Copper Alloy,Gold Plated on contact area.Tin plated on solder tails.
* Solder Peg: Copper Alloy,Tin plated over Nickel.

UNIT: mm

TOLERANCE
.X ±0.25
.XX ±0.1
.XXX ±0.05
ANGLES ±1°

TITLE: SSL, 1.1 NON WP, F, 4P SMT R/A W/O POST, NONE (F)

SCALE: 6:1 | SIZE: A4 | SHEET 1 OF 2
REV. F | WC-REV. C.3 | (QC): Inspection item

Amphenol LTW
安費諾亮泰企業股份有限公司

ITEM NO: SSL11-J4D00-000001	DRAWN BY: NianPing Yu	DATE: 2019-08-29
DWG NO: SSL11-J4D00-000001	CHECKED BY: Fisher Wang	DATE: 2019-08-29
CUSTOMER: ALTW	APPROVED BY: Max Yang	DATE: 2019-08-29

THIS DOCUMENT IS SUBJECT TO CHANGE WITHOUT NOTICE. IT IS CONFIDENTIAL AND A PROPERTY OF Amphenol LTW. DISCLOSURE TO THIRD PARTY HAS TO BE AUTHORIZED BY Amphenol LTW.

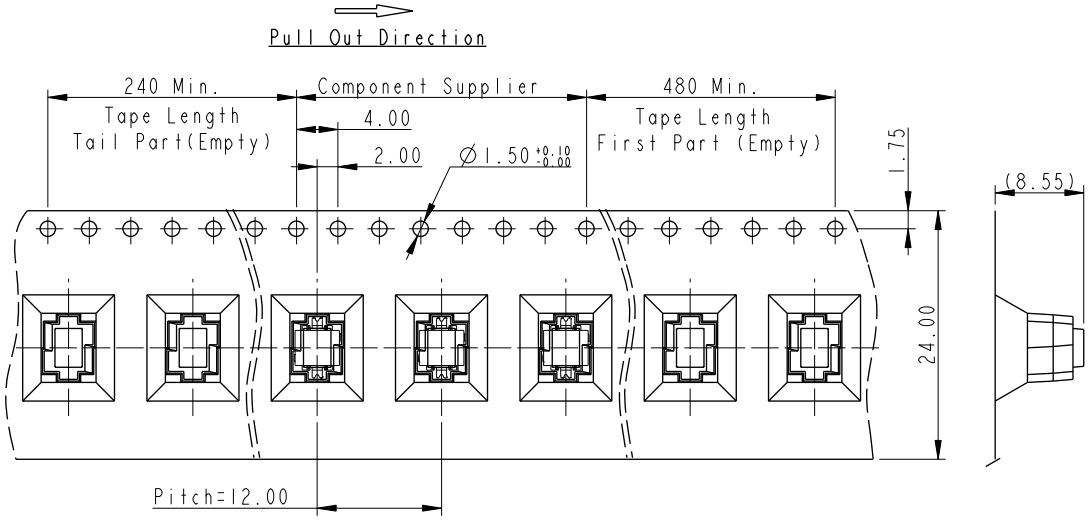

MATERIALS
1. Carrier Tape: Polystyren (PS)
2. Cover Tape: Polystyren (PS)
3. Reel: Polystyren (PS)

QUANTITY
1. 1000Pcs Per Reel
2. 8 Reel Per Carton (8000Pcs/Carton)
3. Reference Standard: EIA-481-D
4. Net Weight: 1.68Kg/Carton.
5. Gross Weight: 5.8Kg/Carton.

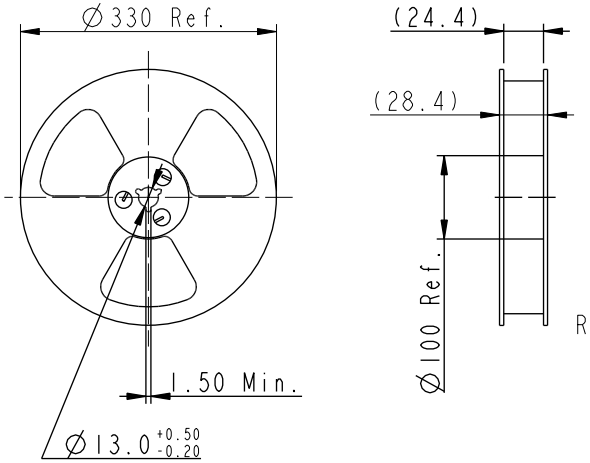

Reel For Carrier Tape

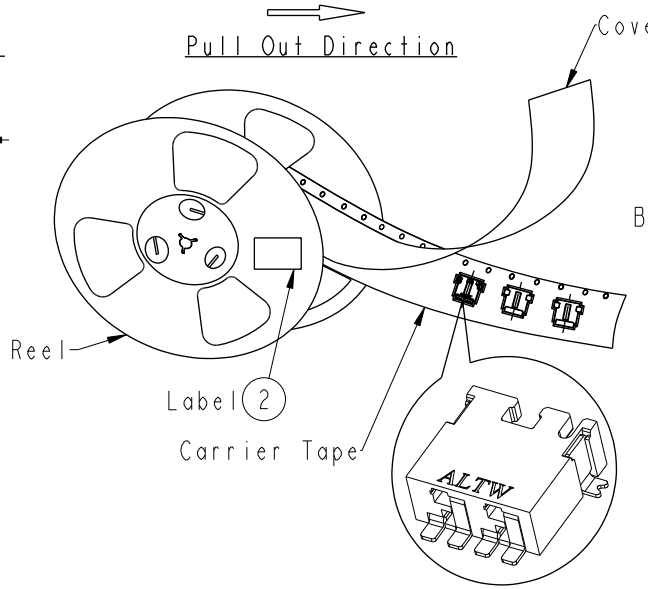

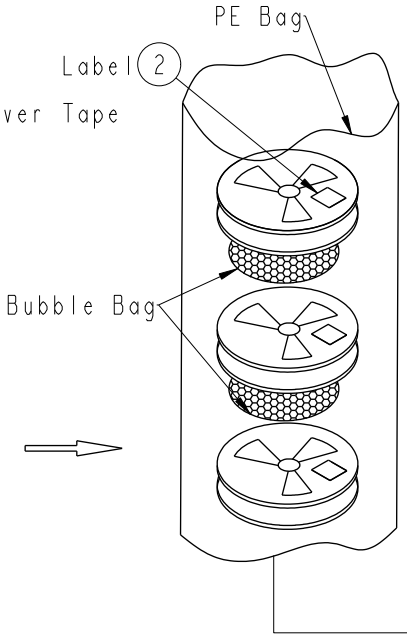

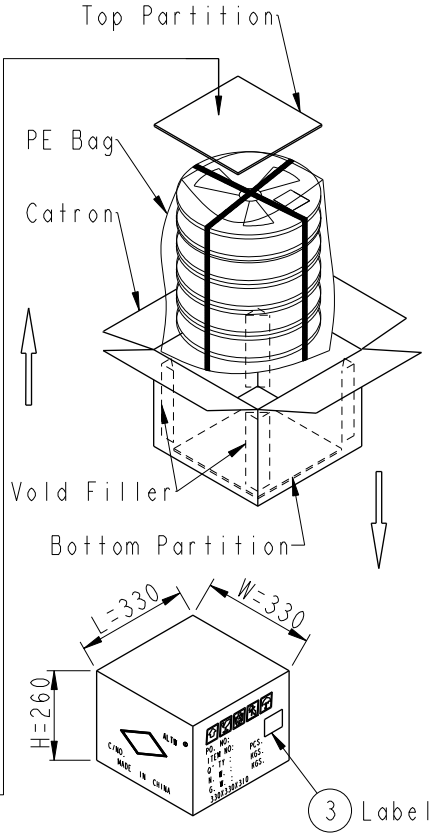

UNIT:mm	TITLE: SSL, 1.1 NON WP, F, 4P SMT R/A W/O POST, NONE (F)	Amphenol LTW 安費諾亮泰企業股份有限公司	ITEM NO: SSL11-J4D00-000001	DRAWN BY: NianPing Yu	DATE: 2019-08-29
TOLERANCE .X ±0.25 .XX ±0.1 .XXX ±0.05 ANGLES ±1°	SCALE: 5:1 / SIZE: A4 / SHEET 2 OF 2		DWG NO: SSL11-J4D00-000001	CHECKED BY: Fisher Wang	DATE: 2019-08-29
	REV.: F / WC-REV.: C.3	(QC):Inspection item	CUSTOMER: ALTW	APPROVED BY: Max Yang	DATE: 2019-08-29

THIS DOCUMENT IS SUBJECT TO CHANGE WITHOUT NOTICE. IT IS CONFIDENTIAL AND A PROPERTY OF Amphenol LTW. DISCLOSURE TO THIRD PARTY HAS TO BE AUTHORIZED BY Amphenol LTW.