REV.	ECN NO.	DATE	SIGN	DESCRIPTION
C	LEN1790247	2017-09-14	Ruru	RoHS Label and blue and white label merger
D	C220940	2022-06-22	Ruru	△D X3
E	C231462	2023-11-15	Ruru	△E X1

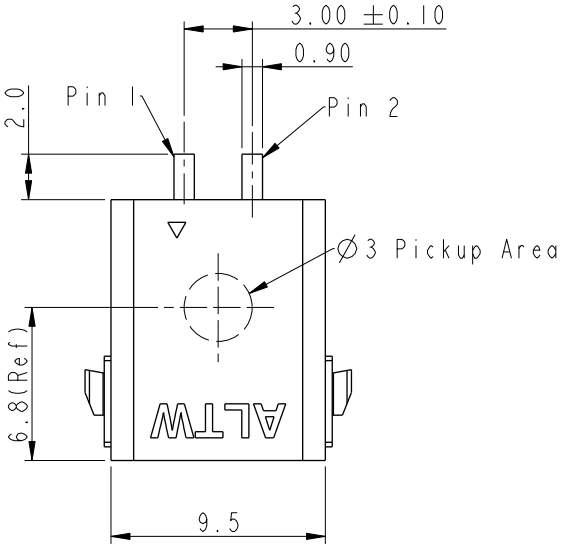

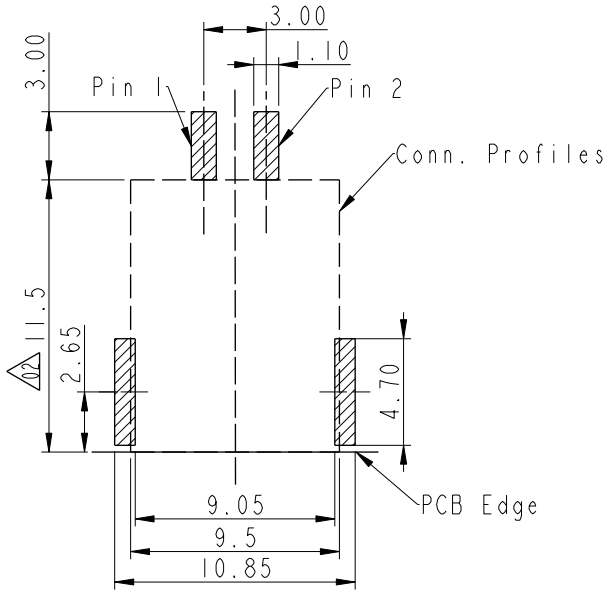

RECOMMENDED PCB LAYOUT
GENERAL TOLERANCE IS ±0.05

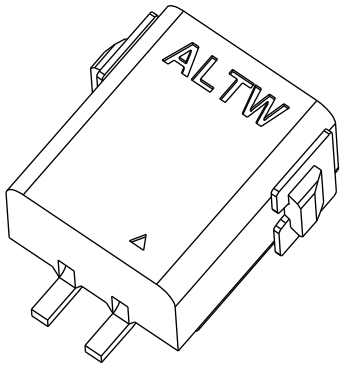

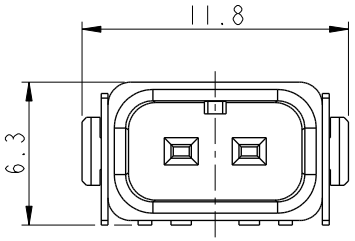

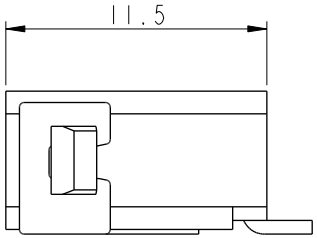

Notes:
* (QC) Important Dimension To Check.
* Waterphoof Rate: IP68(mating)
  1M Depth Of Water In 24 Hours.
* Housing: High temperature thermoplastic.
  UL94V-0, color is natural white.
* Terminal: Copper Alloy,Gold plated on contact area.
* Solder Peg: Copper Alloy,Tin plated over Nickel.
* Current Rating: 5A maximum.
* △E Voltage Rating: 250V DC/AC maximum.
* Operating Temperature: -40~+105℃

UNIT:mm	TITLE: SSL, 1.2 WP, F, 2P SMT R/A W/O POST, NONE △D	Amphenol LTW 安費諾亮泰企業股份有限公司	ITEM NO: SSL12-J2D00-000001	DRAWN BY: Ruru	DATE: 2023-11-15
TOLERANCE ±0.5mm	SCALE: 3:1 / SIZE: A4 / SHEET 1 OF 2		DWG NO: SSL12-J2D00-000001	CHECKED BY: Rita	DATE: 2023-11-15
	REV.: E / WC-REV.: A.6	(QC):Inspection item	CUSTOMER: ALTW	APPROVED BY: Fred	DATE: 2023-11-15

THIS DOCUMENT IS SUBJECT TO CHANGE WITHOUT NOTICE. IT IS CONFIDENTIAL AND A PROPERTY OF Amphenol LTW. DISCLOSURE TO THIRD PARTY HAS TO BE AUTHORIZED BY Amphenol LTW.

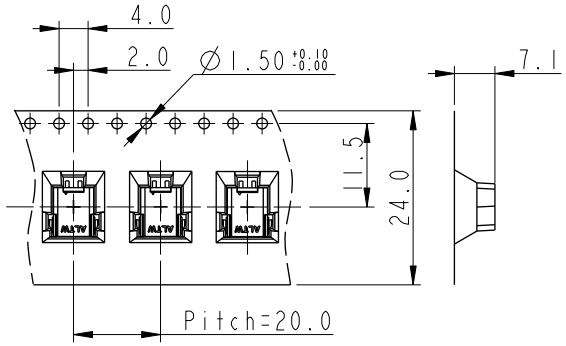

B C D

MATERIALS
1. Carrier Tape: Polystyren (PS)
2. Cover Tape: Polystyren (PS)
3. Reel: Polystyren (PS)

QUANTITY
1. 450Pcs Per Reel
2. 8 Reel Per Carton (3600Pcs/Carton)
3. Reference Standard: EIA-481-D
4. Net Weight: 2.7Kg/Carton
5. Gross Weight: 7.9Kg/Carton

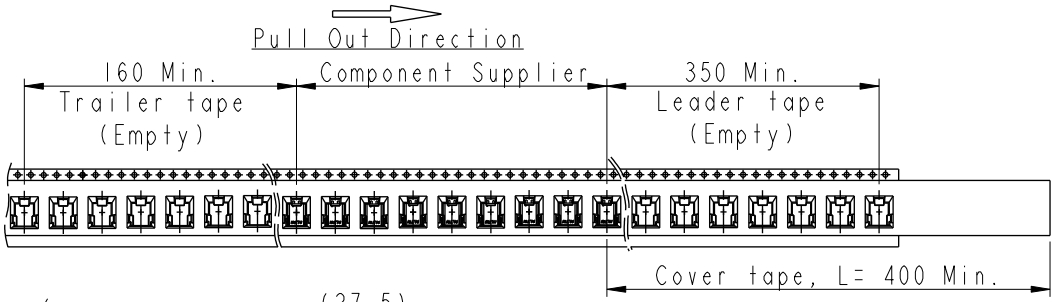

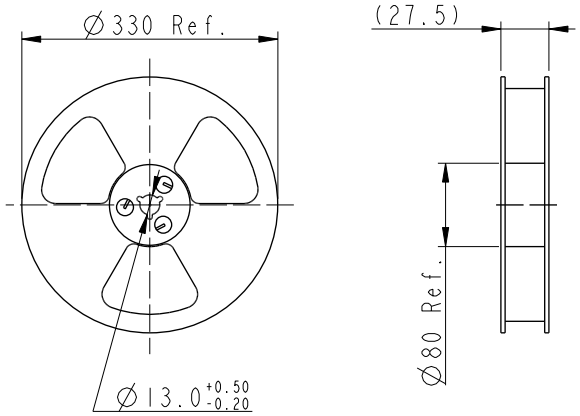

Reel For Carrier Tape

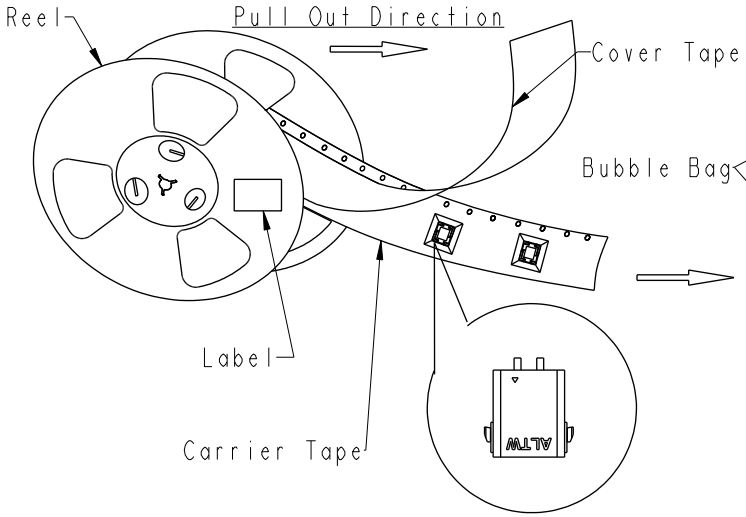

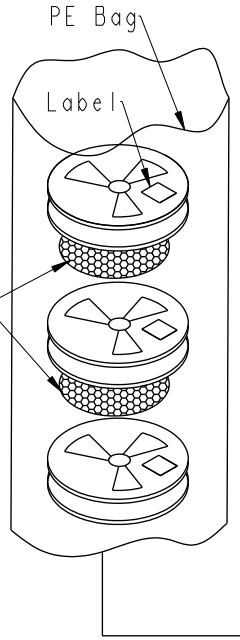

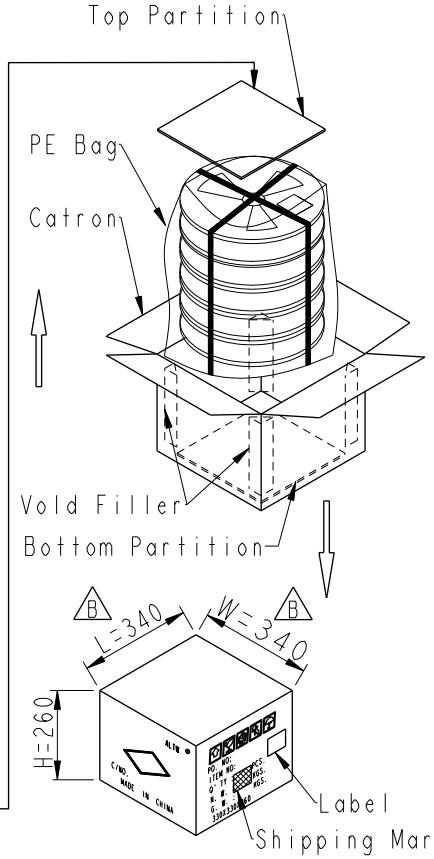

UNIT: mm	TITLE: SSL, 1.2 WP, F, 2P SMT R/A W/O POST, NONE (D)		Amphenol LTW 安費諾亮泰企業股份有限公司	ITEM NO: SSL12-J2D00-000001	DRAWN BY: Ruru	DATE: 2023-11-15
TOLERANCE ±0.5mm	SCALE: 3:1	SIZE: A4	SHEET 2 OF 2	DWG NO: SSL12-J2D00-000001	CHECKED BY: Rita	DATE: 2023-11-15
	REV.: E	WC-REV.: A.6	(QC): Inspection item	CUSTOMER: ALTW	APPROVED BY: Fred	DATE: 2023-11-15

THIS DOCUMENT IS SUBJECT TO CHANGE WITHOUT NOTICE. IT IS CONFIDENTIAL AND A PROPERTY OF Amphenol LTW. DISCLOSURE TO THIRD PARTY HAS TO BE AUTHORIZED BY Amphenol LTW.